Duun Industrier as
7630 Åsen, Norway
www.duun.no

HTS305 Spare parts catalogue

Serial number: from 150007 | 300044

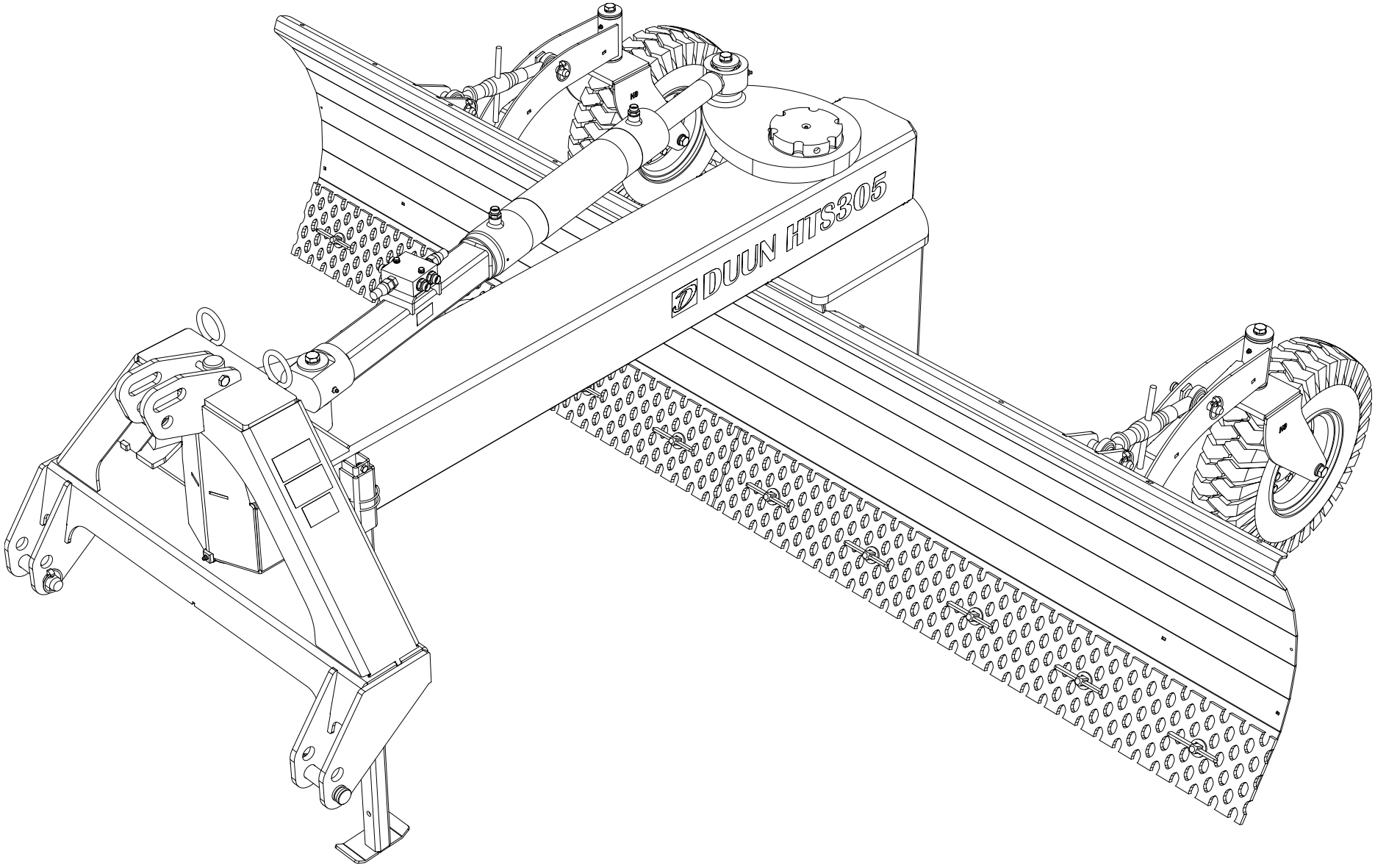

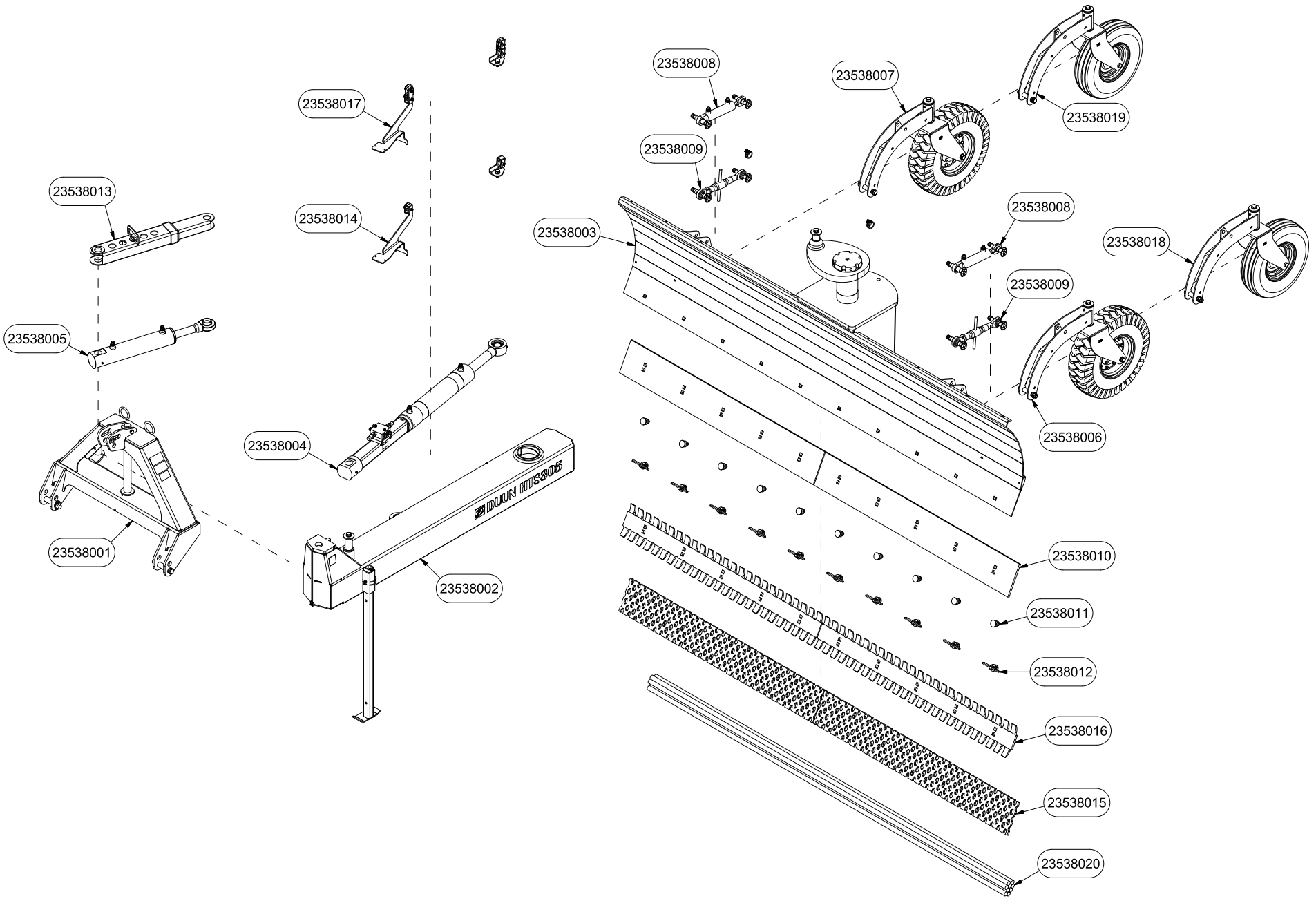
23538017
23538013
23538014
23538005
23538004
23538001
23538002
23538008
23538007
23538019
23538009
23538003
23538008
23538018
23538009
23538006
23538010
23538011
23538012
23538016
23538015
23538020

CONTENT 2
23538001 | THREE POINT LINKAGE 4
23538002 | DRAWBAR 6
23538003 | SCRAPER BLADE 8
23538004 | ROTATING CYLINDER OF SCRAPER BLADE 10
23538005 | BOOM SWING CYLINDER 12
23538006 | LEFT SIDE SUPPORT WHEEL 6” 14
23538007 | RIGHT SIDE SUPPORT WHEEL 6” 16
23538008 | SUPPORT WHEEL CYLINDER 18
23538009 | WHEEL TURNBUCKLE 20
23538010 | FLAT WEAR STEEL 22
23538011 | WEAR STEEL LOCKING HEAD SCREWS 24
23538012 | WEAR STEEL WEDGE BOLTS 26
23538013 | BOLTS WITHOUT WHEEL/TURNBUCKLE WHEEL 28
23538014 | ONE SIDE WHEEL CYLINDER BOLTS 30
23538015 | PERFORATED WEAR STEEL 32
23538016 | WEAR STEEL ICE SCRAPER 34
23538017 | TWO SIDES WHEEL CYLINDER BOLTS 36
23538018 | LEFT SIDE SUPPORT WHEEL 5” 38
23538019 | RIGHT SIDE SUPPORT WHEEL 5” 40
23538020 | WEIGHT PACKAGE 42

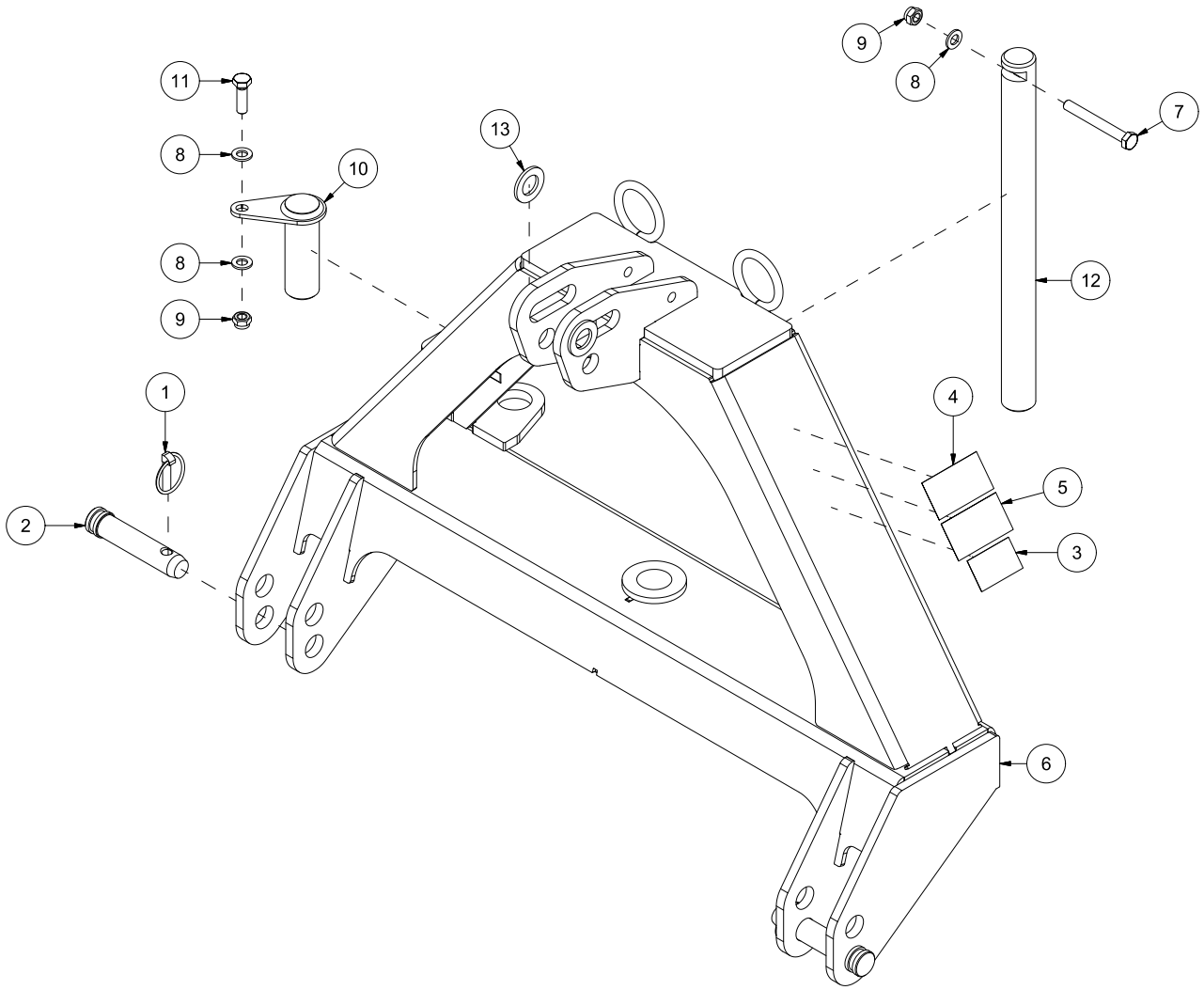
11
8
10
13
9
8
7
8
12
9
1
4
2
5
3
6

Pos	Qty	Article no	Designation
1	2	2556142	Locking pin Ø10x40
2	2	2551730	Drawbar bolt cat. 2 Ø28x95
3	1	2935063	Sticker 68x40 CE
4	1	2935064	Sticker 90x48 Instruction manual
5	1	2935090	Sticker 90x48 Transportation position
6	1	12352057	Three-point linkage HTS
7	1	2422365	Hexagon screw M12x100 ElZn 8.8 DIN 933
8	3	2531069	Washer M12 ElZn DIN 125
9	2	2483611	Locking nut M12 ElZn DIN 985
10	1	12352023	Bolt Ø40
11	1	2422352	Hexagon screw M12x40 ElZn 8.8 DIN 933
12	1	12352022	Assembly bolt Ø40
13	2	2533095	Washer Ø26/45x4

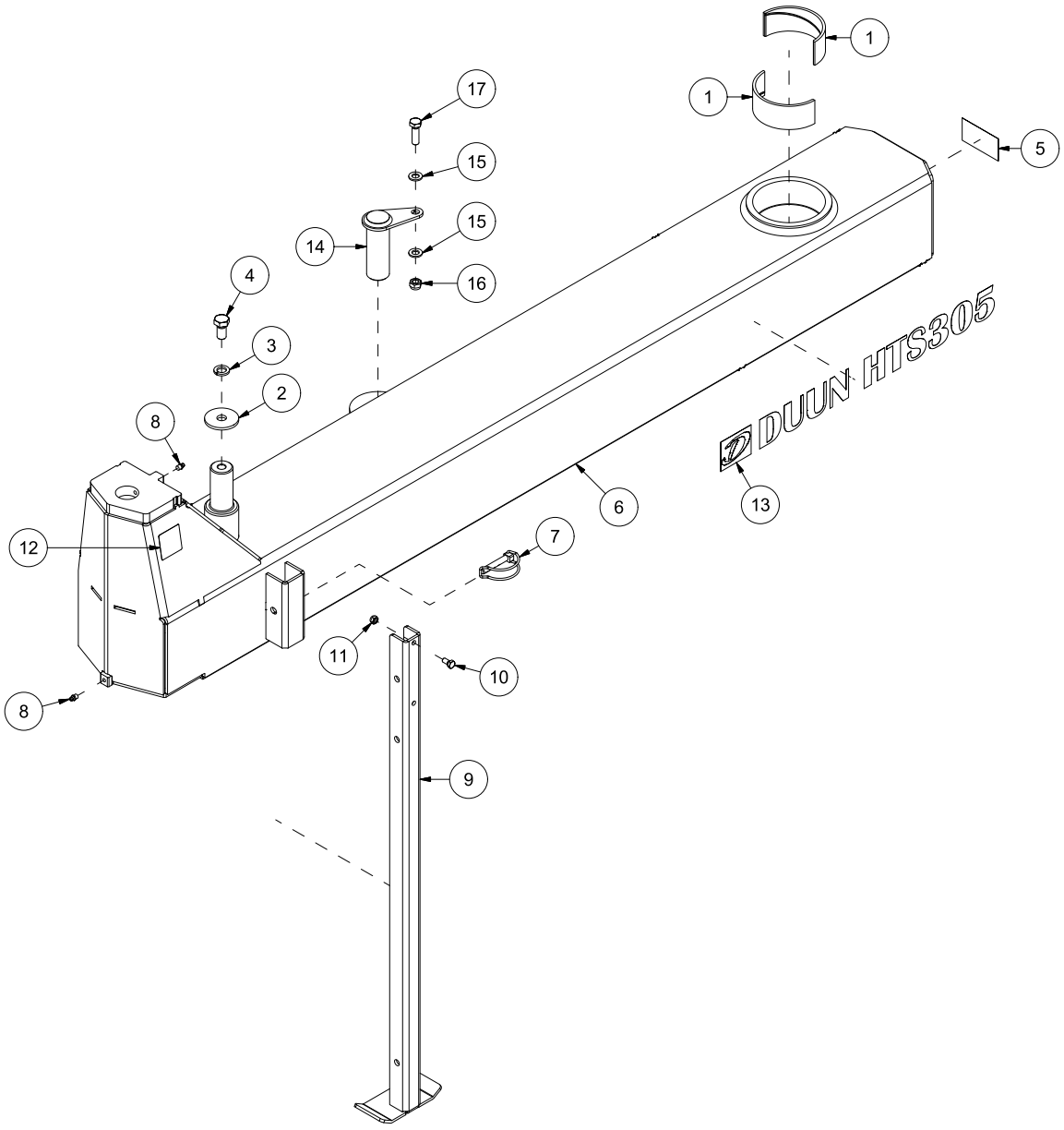
1
1
17
15
15
14
16
4
3
2
8
5
DUUN HTS305
6
13
12
7
11
10
8
9

Pos	Qty	Article no	Designation
1	4	2245024	Plastic bearing Ø128x5
2	1	1238135	Washer Ø17/60x5
3	1	2534078	Spring washer M16 ElZn DIN 127
4	1	2422485	Hexagon screw M16x30 ElZn 8.8 DIN 933
5	1	2935087	Sticker 90x48 Rotation
6	1	12352024	Drawbar HTS
7	1	2552240	Spring dowel pin 10x60
8	2	2478407	Grease nipple Straight M8
9	1	12352065	Support leg
10	1	2422240	Hexagon screw M8x16 ElZn 8.8 DIN 933
11	1	2483609	Locking nut M8 ElZn DIN 985
12	1	2935170	Sticker 50x50 Serial number
13	2	2935097	Sticker HTS305
14	1	12352023	Bolt Ø40
15	2	2531069	Washer M12 ElZn DIN 125
16	1	2483611	Locking nut M12 ElZn DIN 985
17	1	2422352	Hexagon screw M12x40 ElZn 8.8 DIN 933

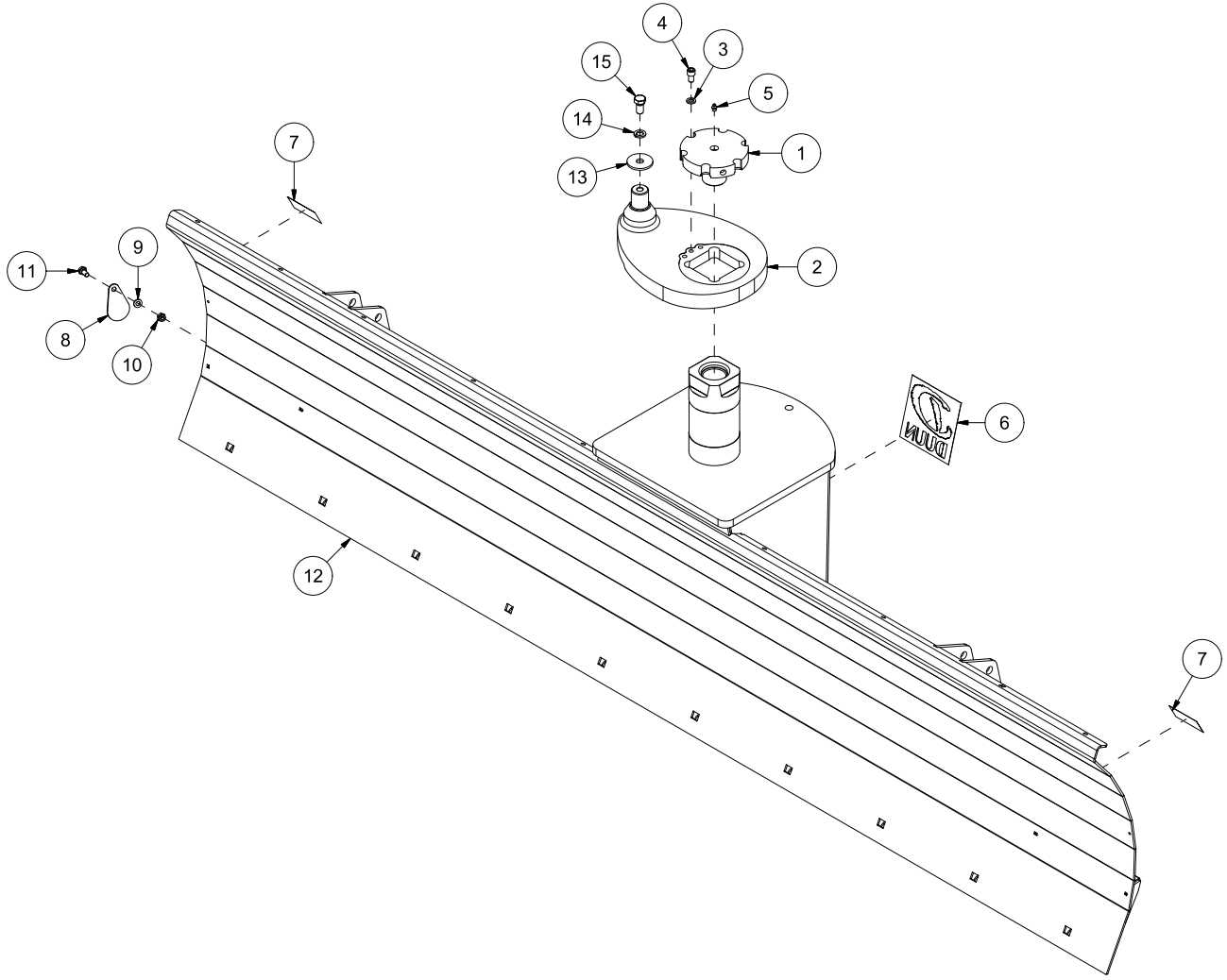
4
3
15
5
14
1
13
7
2
11
9
8
10
6
12
7

Pos	Qty	Article no	Designation
1	1	1235192	Center srew
2	1	1235191	Rotation arm 286º
3	1	2534069	Spring washer M12 ElZn DIN 127
4	1	2472330	Hex cylinder screw M12x20 ElZn DIN 912
5	1	2478410	Grease nipple, straight 1/8"
6	1	2935150	Sticker Duun 160x160
7	2	2935089	Sticker 90x48 Risk of legs crushing
8	1	12352055	Lid
9	1	2531060	Washer M10 ElZn DIN 125
10	1	2483610	Locking nut M10 ElZn DIN 985
11	1	2422297	Hexagon screw M10x25 ElZn 8.8 DIN 933
12	1	12353001	Scraper blade HTS305
13	1	1238135	Washer Ø17/60x5
14	1	2534078	Spring washer M16 ElZn DIN 127
15	1	2422485	Hexagon screw M16x30 ElZn 8.8 DIN 933

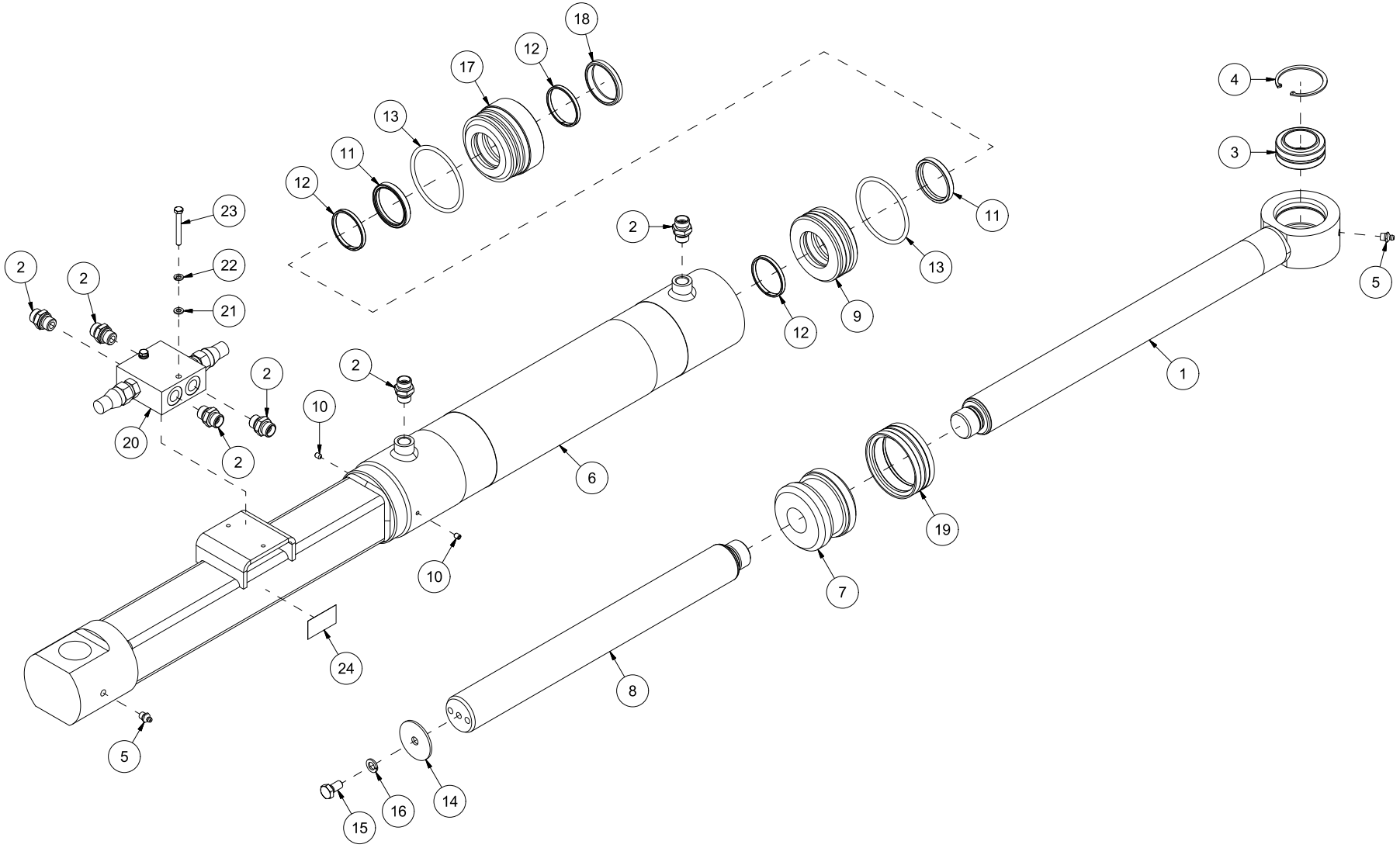
18
12
17
13
11
12
23
22
21
2
2
2
2
2
20
10
10
6
24
5
2
12
9
13
11
4
3
5
1
19
7
8
14
16
15

Pos	Qty	Article no	Designation
1	1	1235146	Piston rod Ø50
2	6	2957749	Hexagon nipple GEK BSP 3/8" L12 ED
3	1	2954140	Spherical bearing GE 40 ES
4	1	2553262	Seeger ring I 62x2,0 DIN 471
5	2	2478410	Grease nipple, straight 1/8"
6	1	1235176	Cylinder tube
7	1	1235149	Piston
8	1	1235147	Piston rod Ø50
9	1	1235150	Rear packing box
10	2	2473195	Threaded pin M6x6 St DIN 916
11	2	2232140	Compact seal 50-60
12	3	1235156	Guide band
13	2	2233082	O-ring 82,00x5,00
14	1	1235151	Washer
15	1	2422295	Hexagon screw M10x20 ElZn 8.8 DIN 933
16	1	2534060	Spring washer M10 ElZn DIN 127
17	1	1235148	Packing box
18	1	2232835	Wipers 50-60
19	1	2234380	Compact seal Ø90/76 L22,5
20	1	2955337	Safety valve
21	2	2531039	Washer M6 ElZn DIN 125
22	2	2534039	Spring washer M6 ElZn DIN 127
23	2	2422217	Hexagon screw M6x50 ElZn 8.8 DIN 931
24	1	2935168	Sticker 50x28 286'

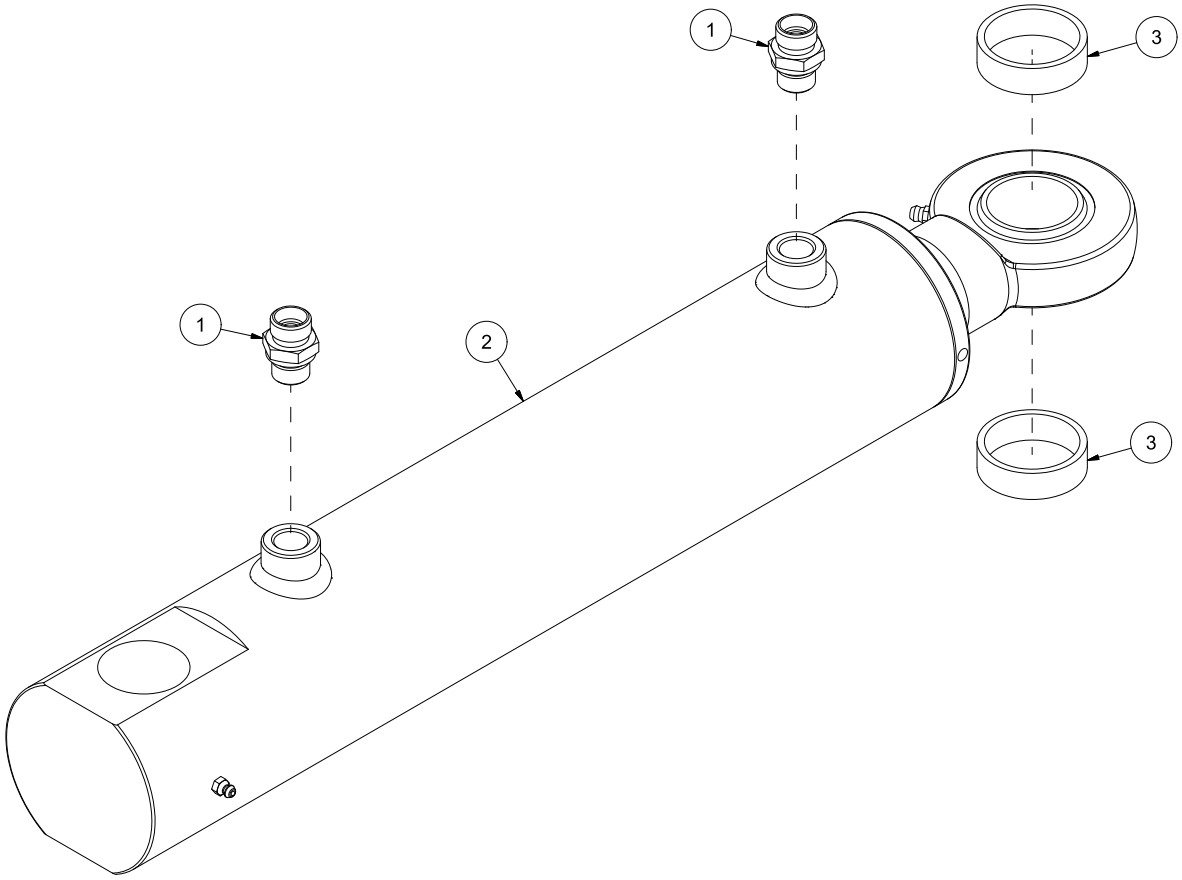
1
3
1
2
3

Pos	Qty	Article no	Designation
1	2	2957749	Hexagon nipple GEK BSP 3/8" L12 ED
2	1	2955368	Cylinder Ø80/40 SL250
3	2	12353010	Sleeve Ø48/42x14

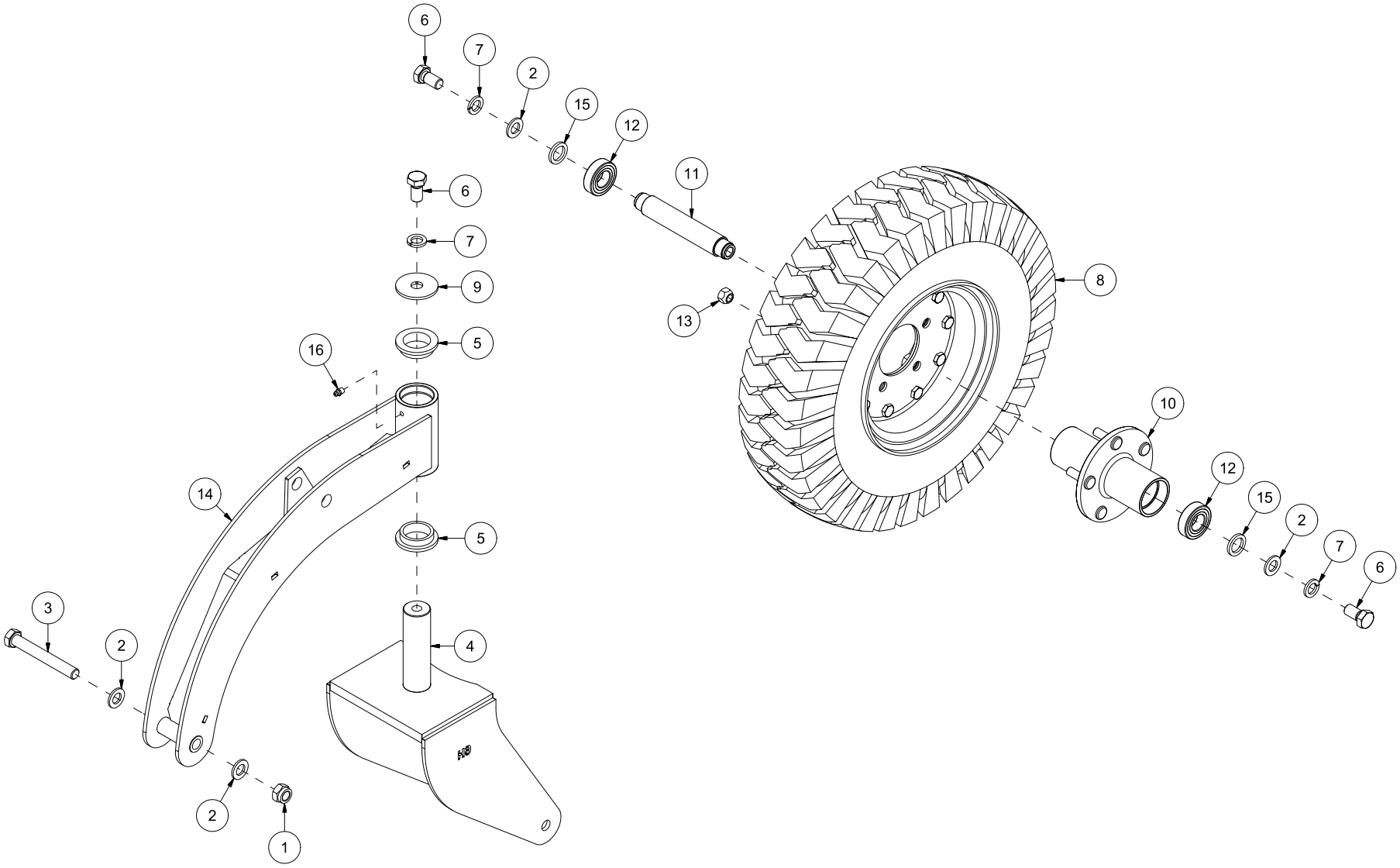
6
7
2
15
12
11
6
7
9
5
16
14
5
4
3
2
2
1
13
8
10
12
15
2
7
6

Pos	Qty	Article no	Designation
1	1	2483613	Locking nut M16 ElZn DIN 985
2	4	2531078	Washer M16 ElZn DIN 125
3	1	2422504	Hexagon screw M16x120 ElZn 8.8 DIN 931
4	1	12352049	Wheel fork 6" HTS
5	2	2245023	Plastic bearing Ø39/48x15
6	3	2422485	Hexagon screw M16x30 ElZn 8.8 DIN 933
7	3	2534078	Spring washer M16 ElZn DIN 127
8	1	2941520	Wheel 6.00x9 10L Compl. w/rim
9	1	12352053	Washer Ø17/60x4
10	1	12352050	Hub 5x115
11	1	12352051	Shaft
12	2	2951129	Ball bearings 6205 2RS 25x52x15 DIN 625
13	5	2489614	Hexagon nut M12x1.5 conical
14	1	12352054	Wheel arm HTS
15	2	12352052	Washer
16	1	2478407	Grease nipple Straight M8

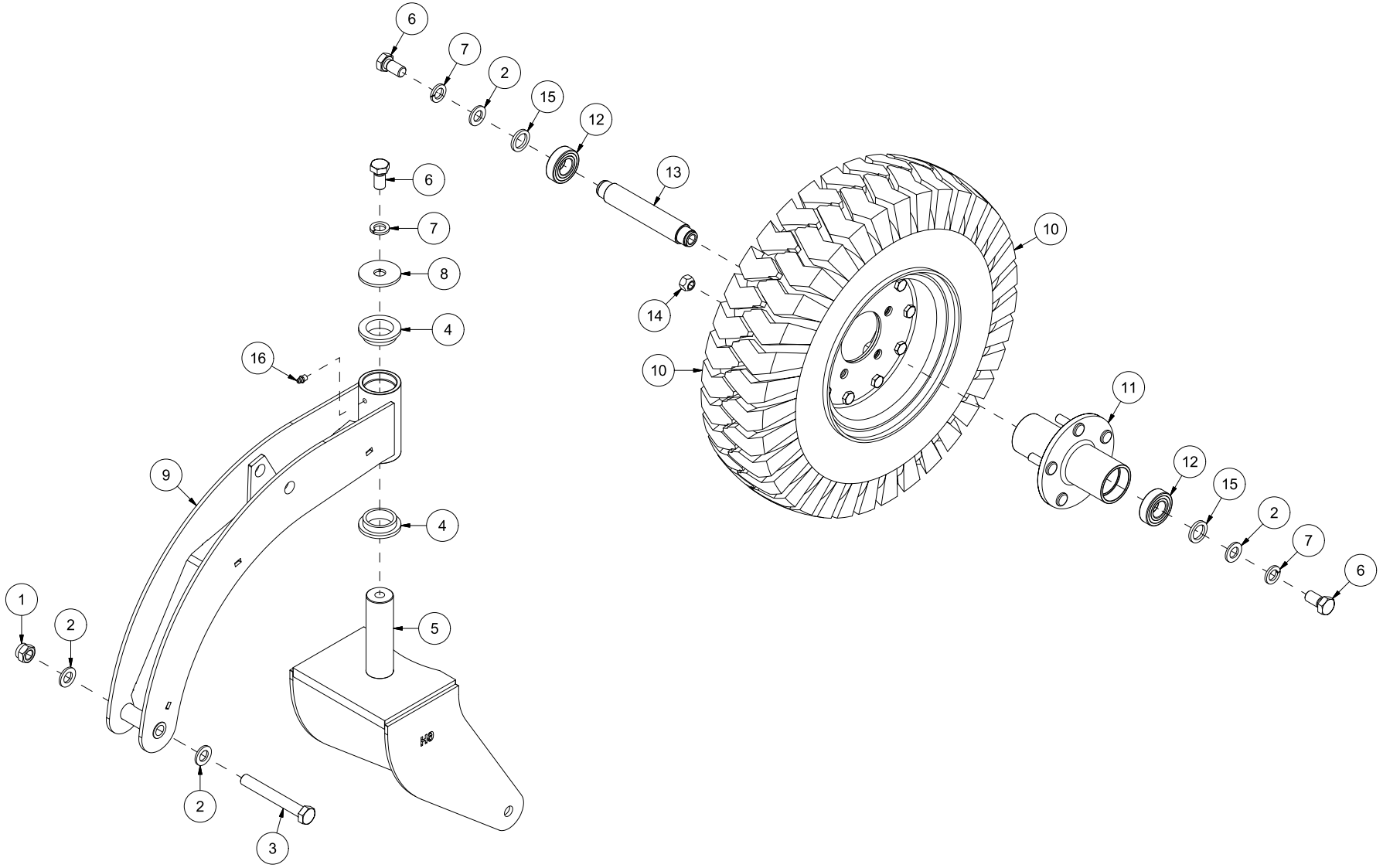
6
7
2
15
12
13
10
14
10
11
12
15
2
7
6
6
7
8
4
16
9
4
5
1
2
2
3

Pos	Qty	Article no	Designation
1	1	2483613	Locking nut M16 ElZn DIN 985
2	4	2531078	Washer M16 ElZn DIN 125
3	1	2422504	Hexagon screw M16x120 ElZn 8.8 DIN 931
4	2	2245023	Plastic bearing Ø39/48x15
5	1	12352049	Wheel fork 6" HTS
6	3	2422485	Hexagon screw M16x30 ElZn 8.8 DIN 933
7	3	2534078	Spring washer M16 ElZn DIN 127
8	1	12352053	Washer Ø17/60x4
9	1	12352054	Wheel arm HTS
10	1	2941520	Wheel 6.00x9 10L Compl. w/rim
11	1	12352050	Hub 5x115
12	2	2951129	Ball bearings 6205 2RS 25x52x15 DIN 625
13	1	12352051	Shaft
14	5	2489614	Hexagon nut M12x1.5 conical
15	2	12352052	Washer
16	1	2478407	Grease nipple Straight M8

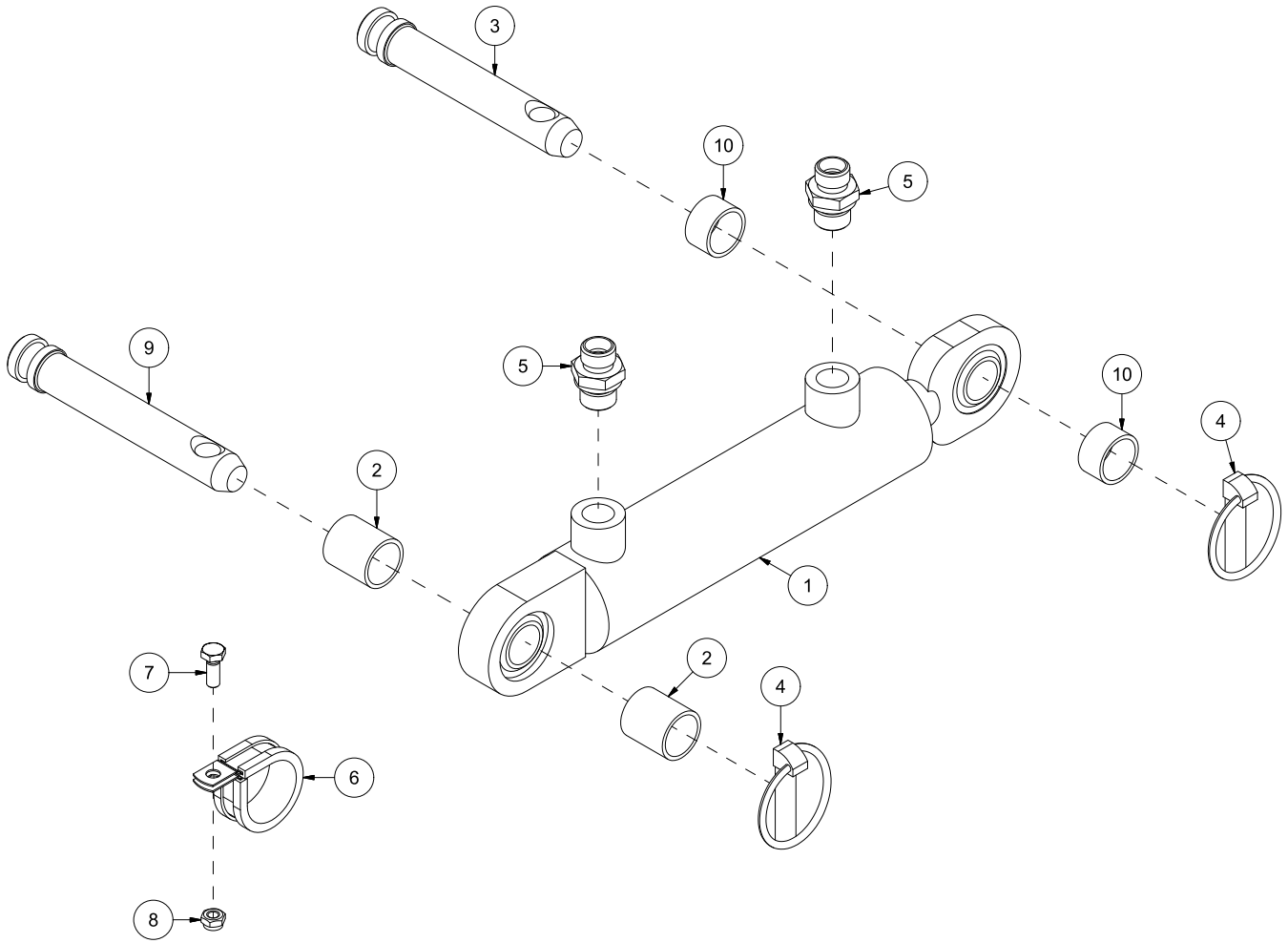
3
10
5
9
5
10
4
2
1
7
2
4
6
8

Pos	Qty	Article no	Designation
1	1	2955360	Cylinder 40x42x100 I20I20
2	2	12352010	Sleeve
3	1	2526321	Top strut bolt cat. 1 Ø19x70
4	2	2556142	Locking pin Ø10x40
5	2	2957759	Hexagon nipple GEK BSP 3/8" L10 ED
6	1	2544100	Rubber clamp ABA Ø32mm (HTS/hy)
7	1	2422200	Hexagon screw M6x16 ElZn 8.8 DIN 933
8	1	2483608	Locking nut M6 ElZn DIN 985
9	1	2526322	Top strut bolt cat. 1 Ø19x97
10	2	1235178	Sleeve Ø21/25x14

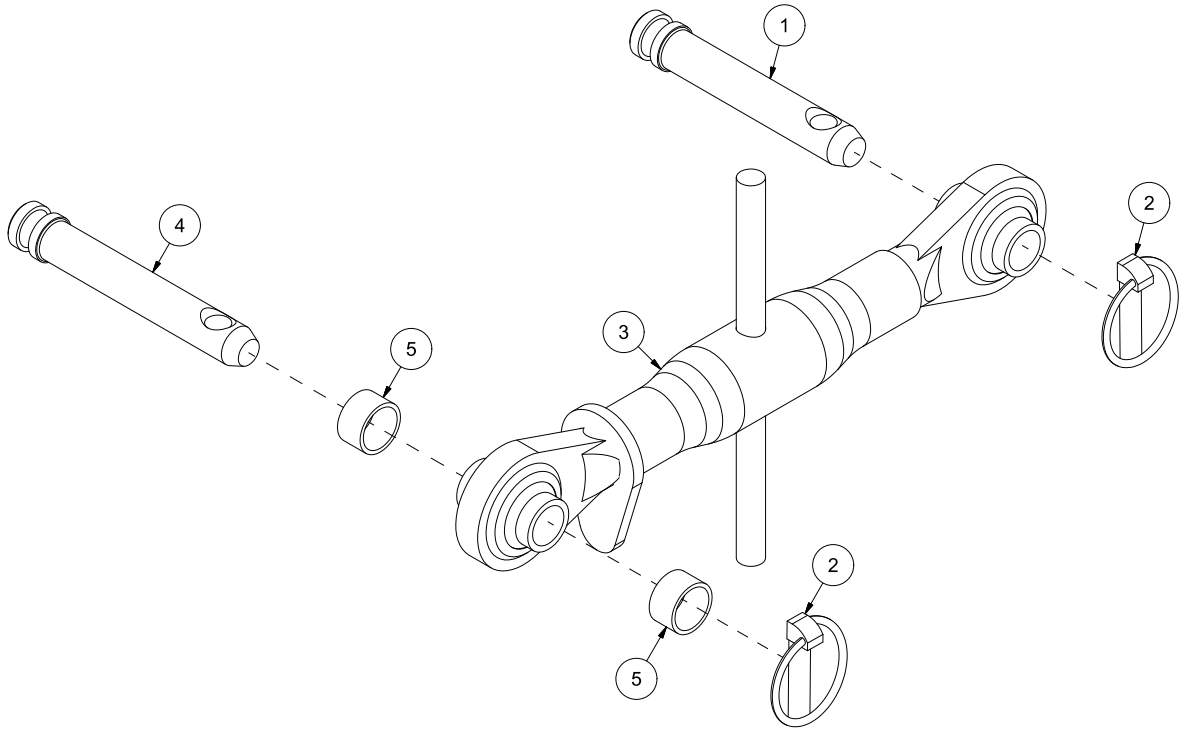
1
2
4
5
3
2
5

Pos	Qty	Article no	Designation
1	1	2526321	Top strut bolt cat.1 Ø19x70
2	2	2556142	Locking pin Ø10x40
3	1	2551707	Top strut - Turnbuckle 290mm
4	1	2526322	Top strut bolt cat. 1 Ø19x97
5	2	1235178	Sleeve Ø21/25x14

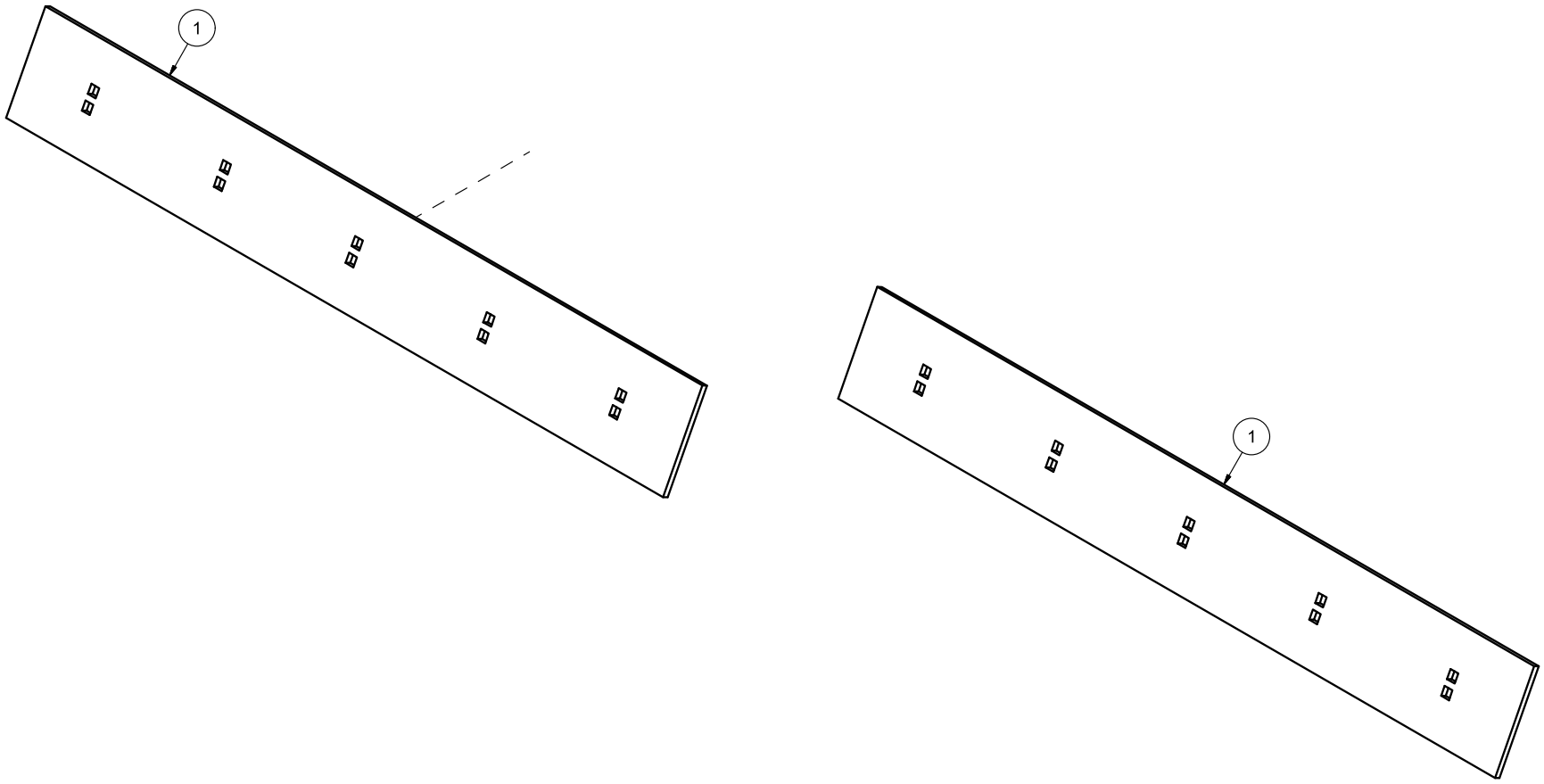
1
1

Pos	Qty	Article no	Designation
1	2	2112229	Flat wear steel 12x200x1525

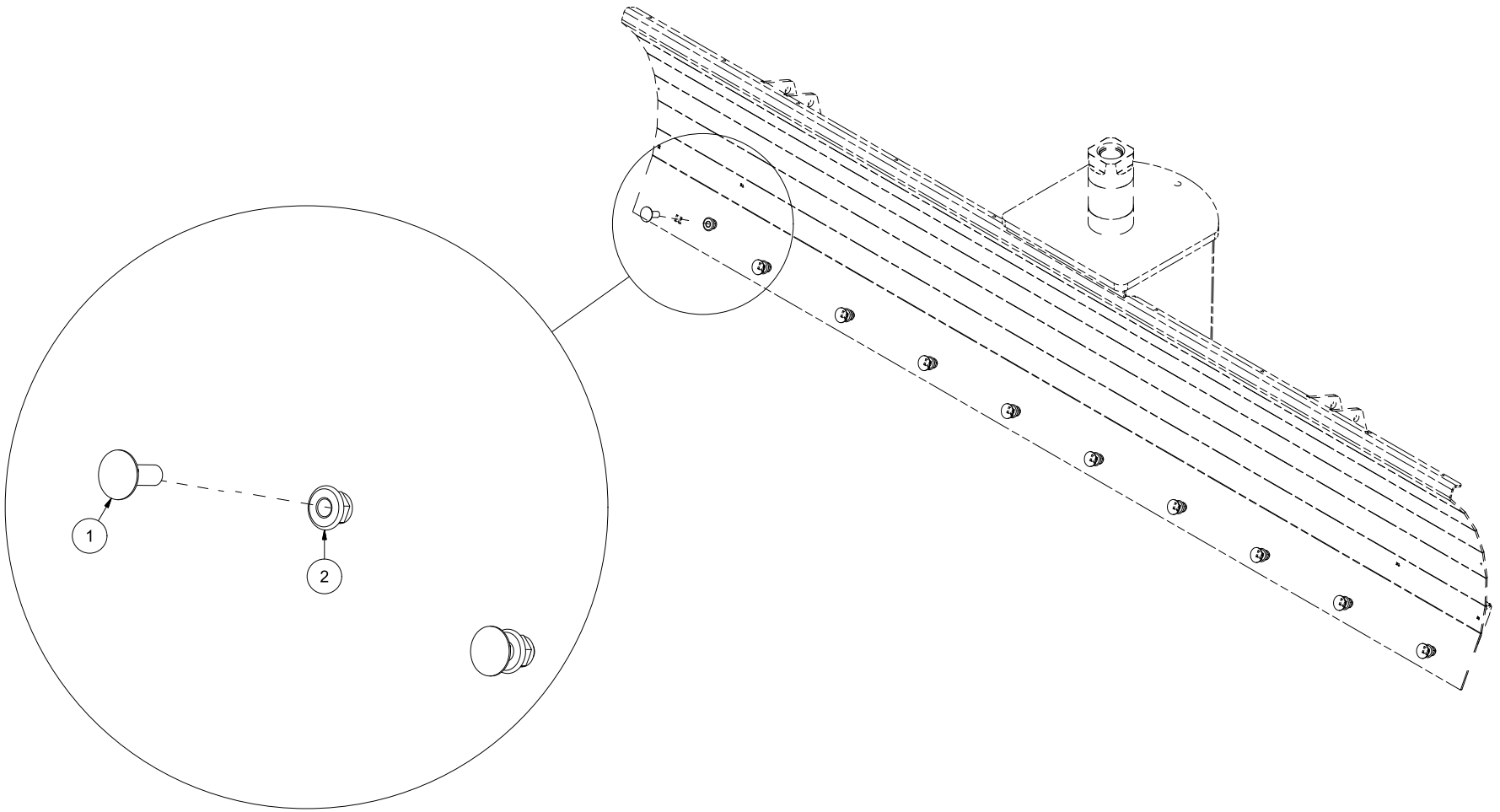
1
2

Pos	Qty	Article no	Designation
1	10	2344491	Locking screw M16x45 ElZn 8.8 DIN 603
2	10	2489175	Locking nut with flange M16 ElZn DIN 6926

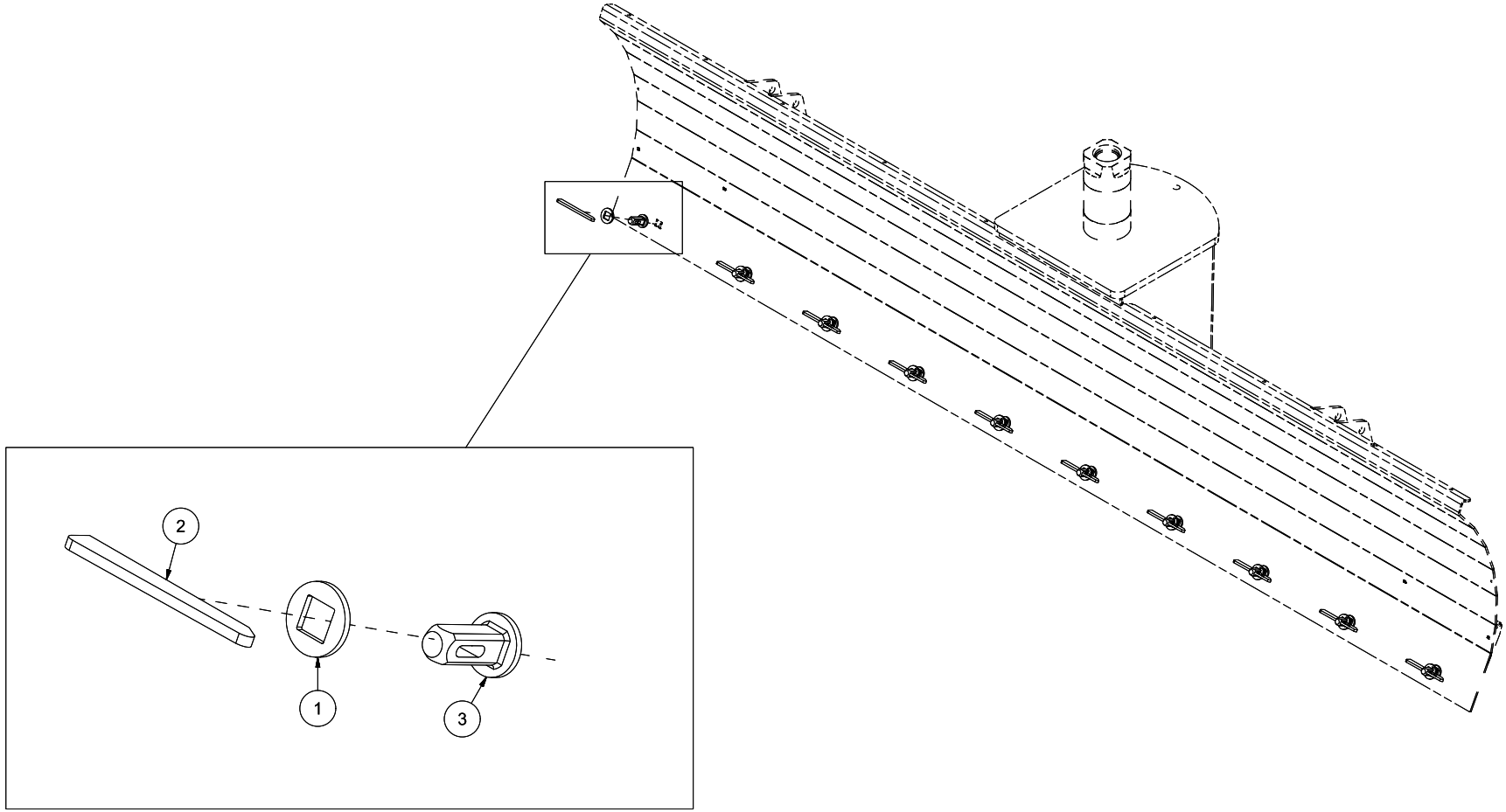
2
1
3

Pos	Qty	Article no	Designation
1	10	1233185	Washer Ø38x4
2	10	2526330	Wedge 20.5x125 curved w/wart
3	10	2526331	Wedge bolt 16x47 mm

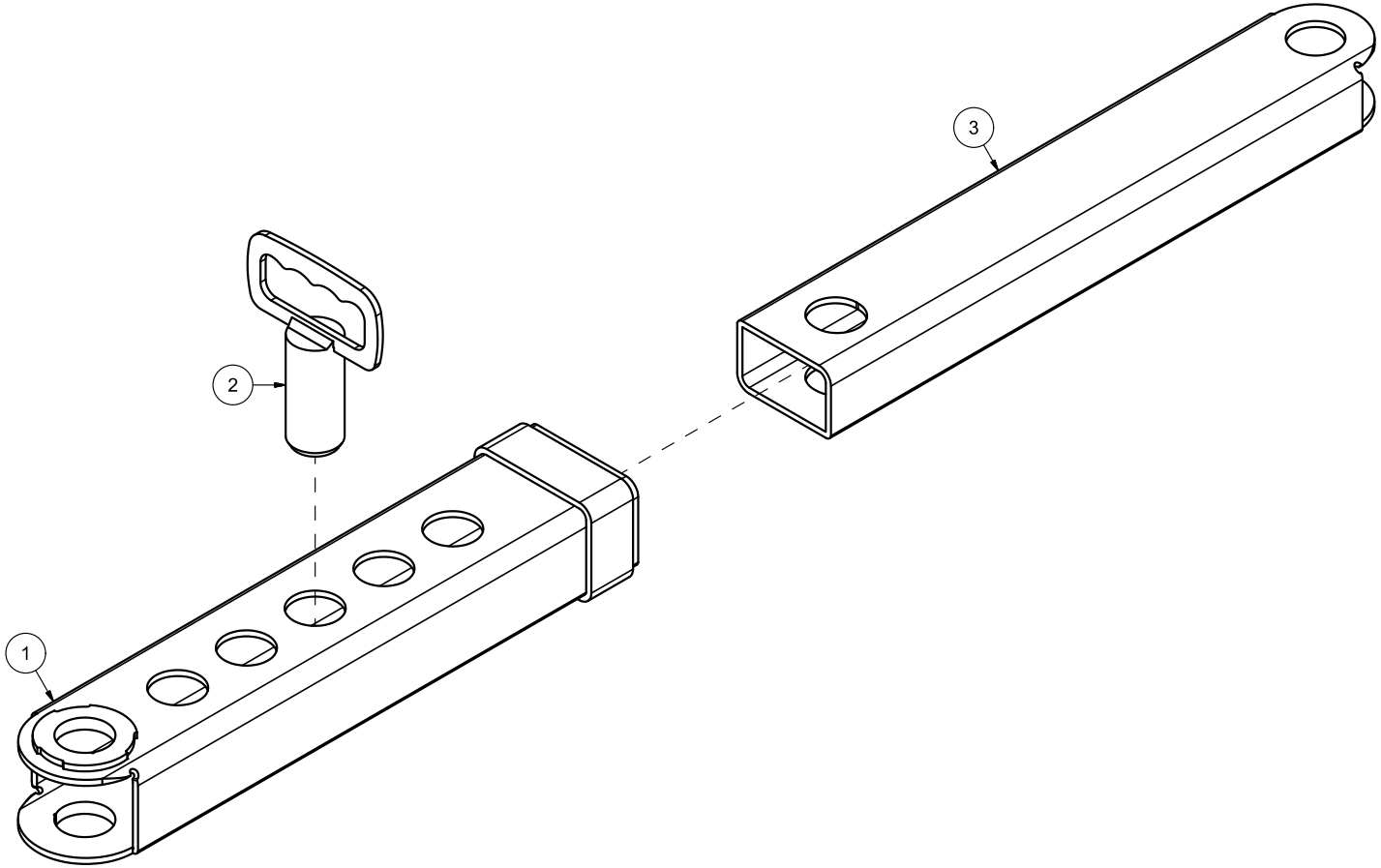
3
2
1

Pos	Qty	Article no	Designation
1	1	1238140	Outer strut
2	1	1238139	Adjustment bolt Ø40
3	1	1238141	Inner strut

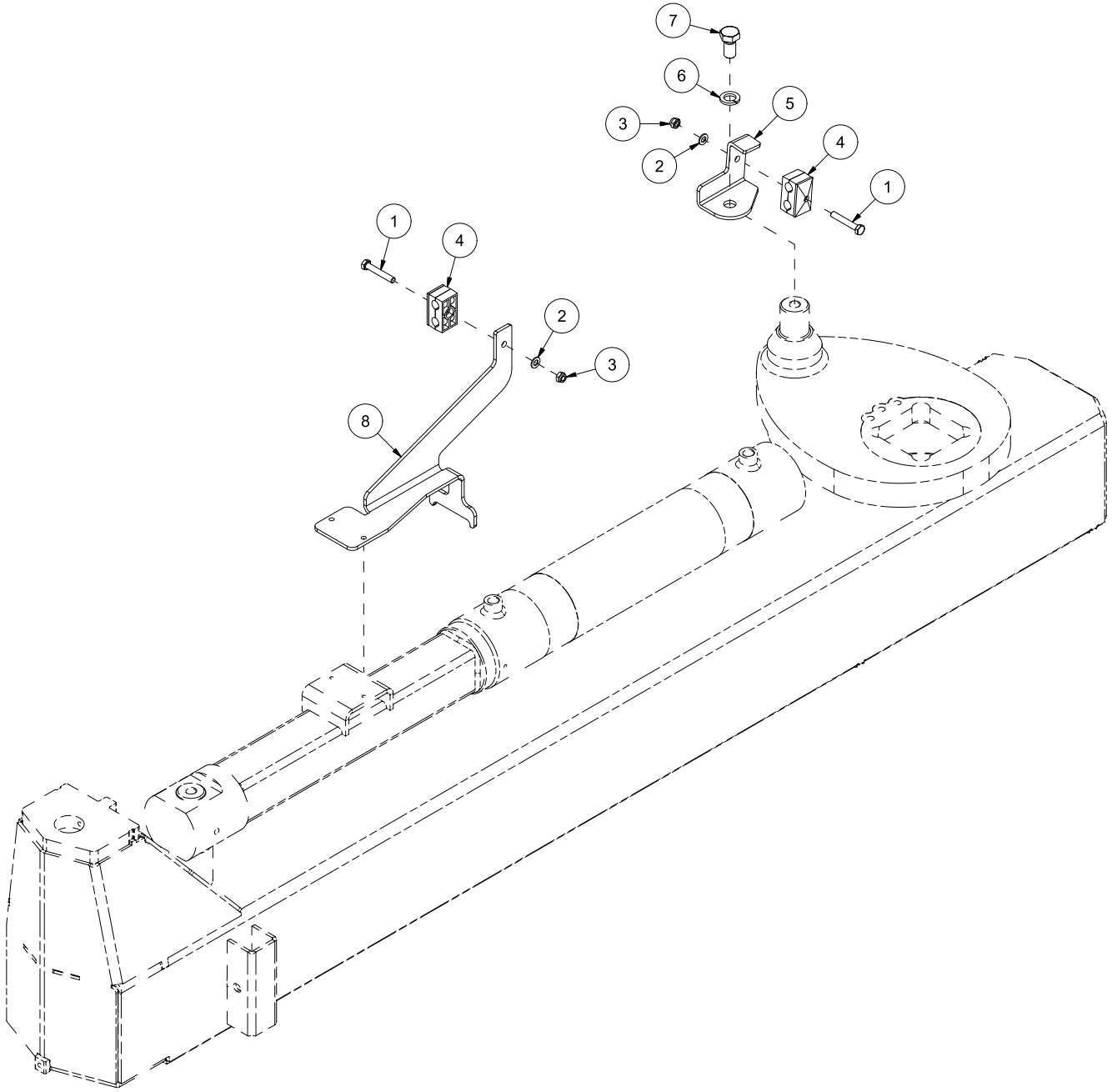
7
6
5
3
4
2
1
1
4
2
3
8

Pos	Qty	Article no	Designation
1	2	2422256	Hexagon screw M8x50 ElZn 8.8 DIN 931
2	2	2531047	Washer M8 ElZn DIN 125
3	2	2483609	Locking nut M8 ElZn DIN 985
4	2	4251206	Hose holder
5	1	1235122	Rear hose attachment
6	1	2534078	Spring washer M16 ElZn DIN 127
7	1	2422485	Hexagon screw M16x30 ElZn 8.8 DIN 933
8	1	12353008	Front hose attachment

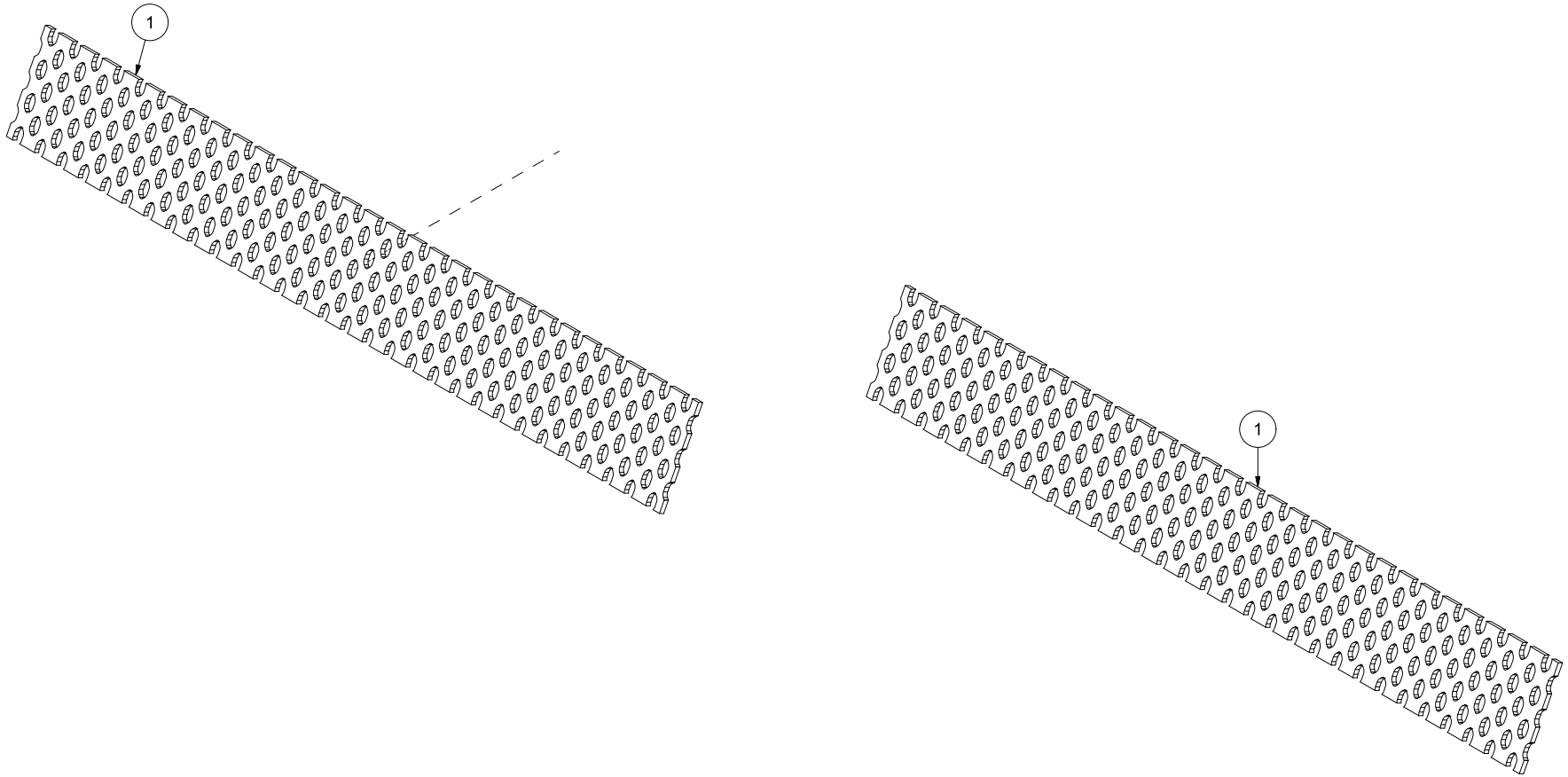
1
1

Pos	Qty	Article no	Designation
1	2	2112243	Perforated wear steel 11x200x1525

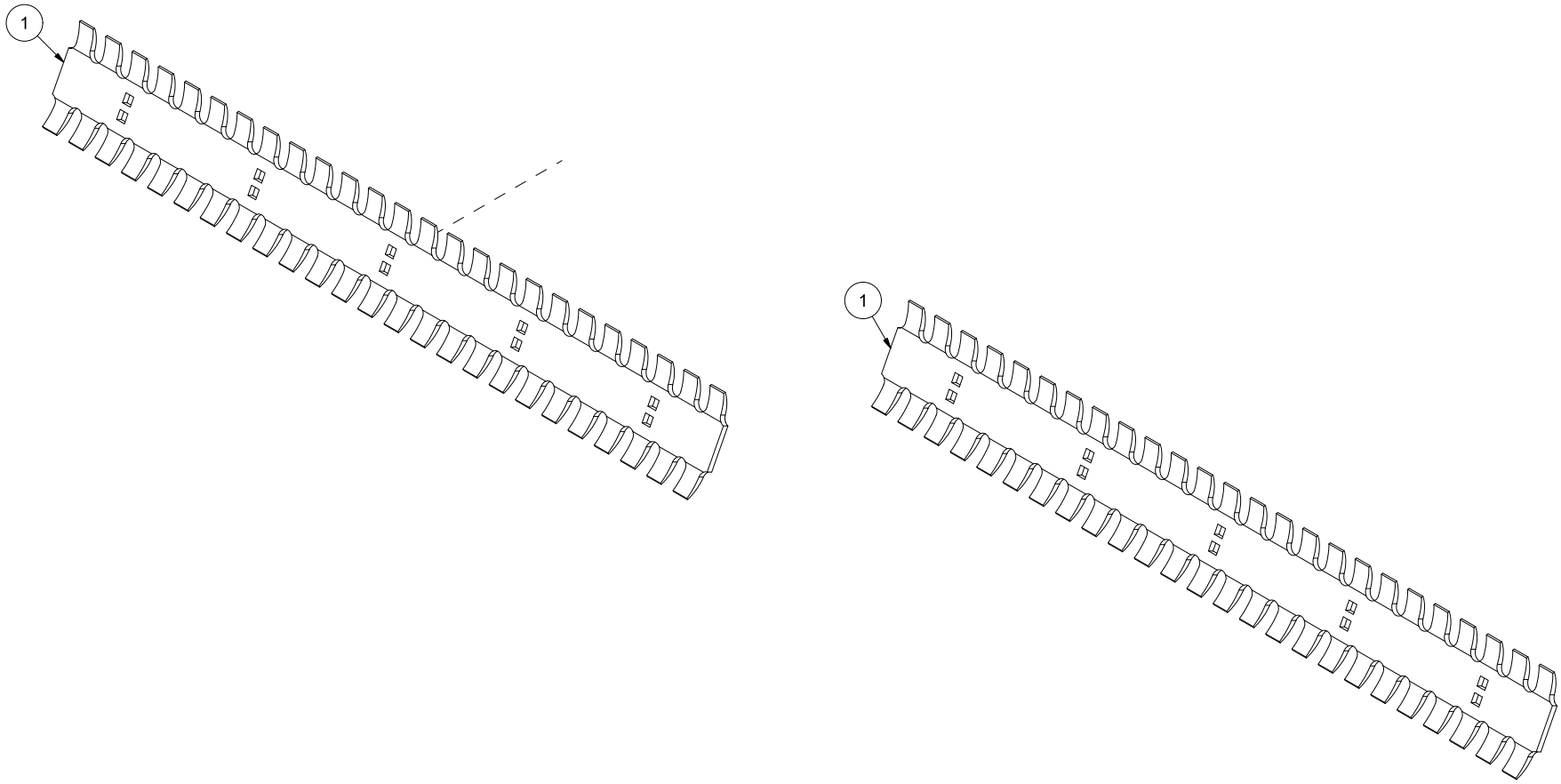
1
1

Pos	Qty	Article no	Designation
1	2	2112233	Wear steel ice scraper 12x193x1525

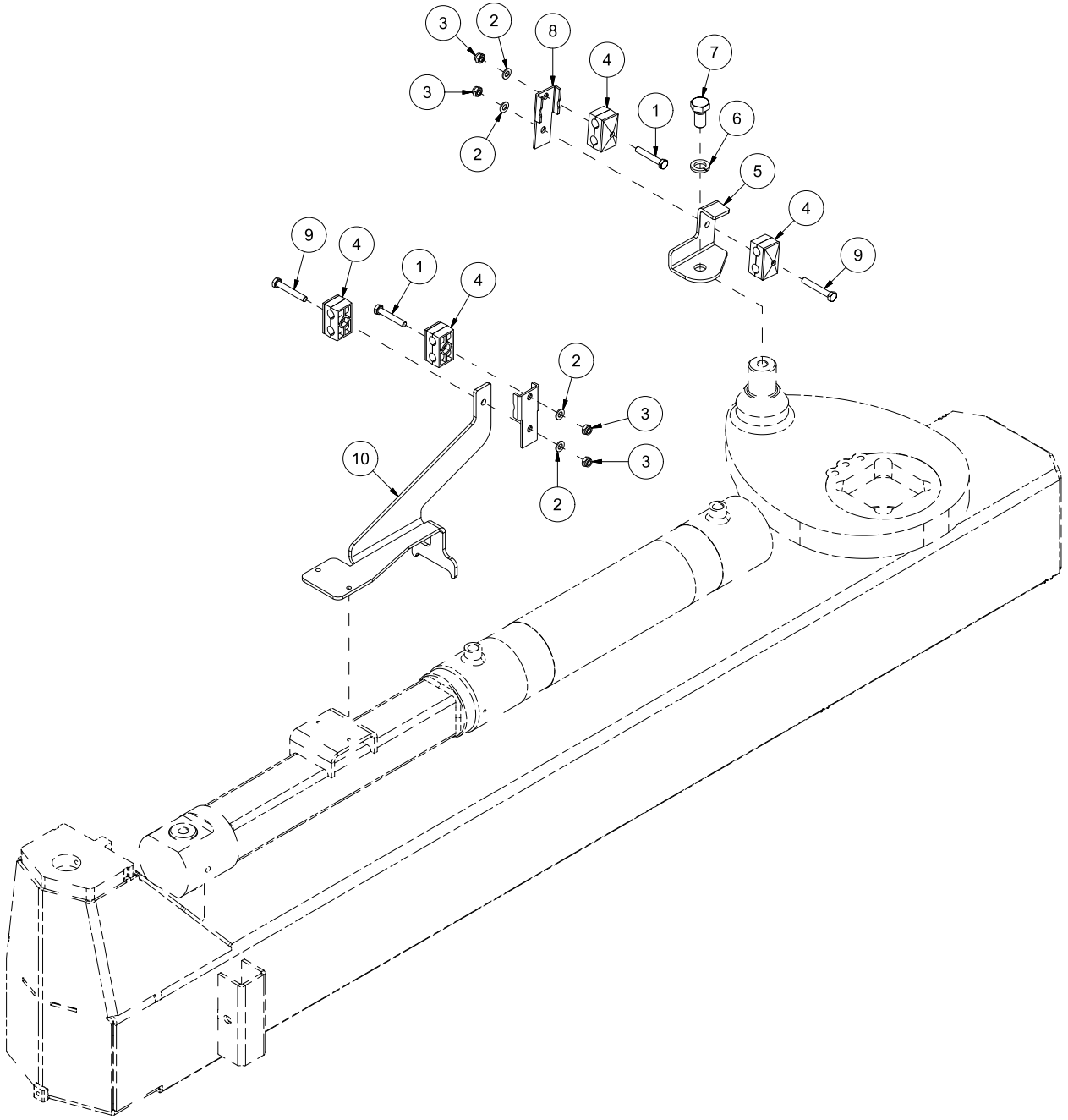
3
2
8
4
7
3
1
6
2
5
4
9
4
1
4
9
2
3
10
3
2

Pos	Qty	Article no	Designation
1	2	2422256	Hexagon screw M8x50 ElZn 8.8 DIN 931
2	4	2531047	Washer M8 ElZn DIN 125
3	4	2483609	Locking nut M8 ElZn DIN 985
4	4	4251206	Hose holder
5	1	1235122	Rear hose attachment
6	1	2534078	Spring washer M16 ElZn DIN 127
7	1	2422485	Hexagon screw M16x30 ElZn 8.8 DIN 933
8	2	1235188	Plate for double wheel adjustment
9	2	2422258	Hexagon screw M8x55 ElZn 8.8 DIN 931
10	1	12353008	Front hose attachment

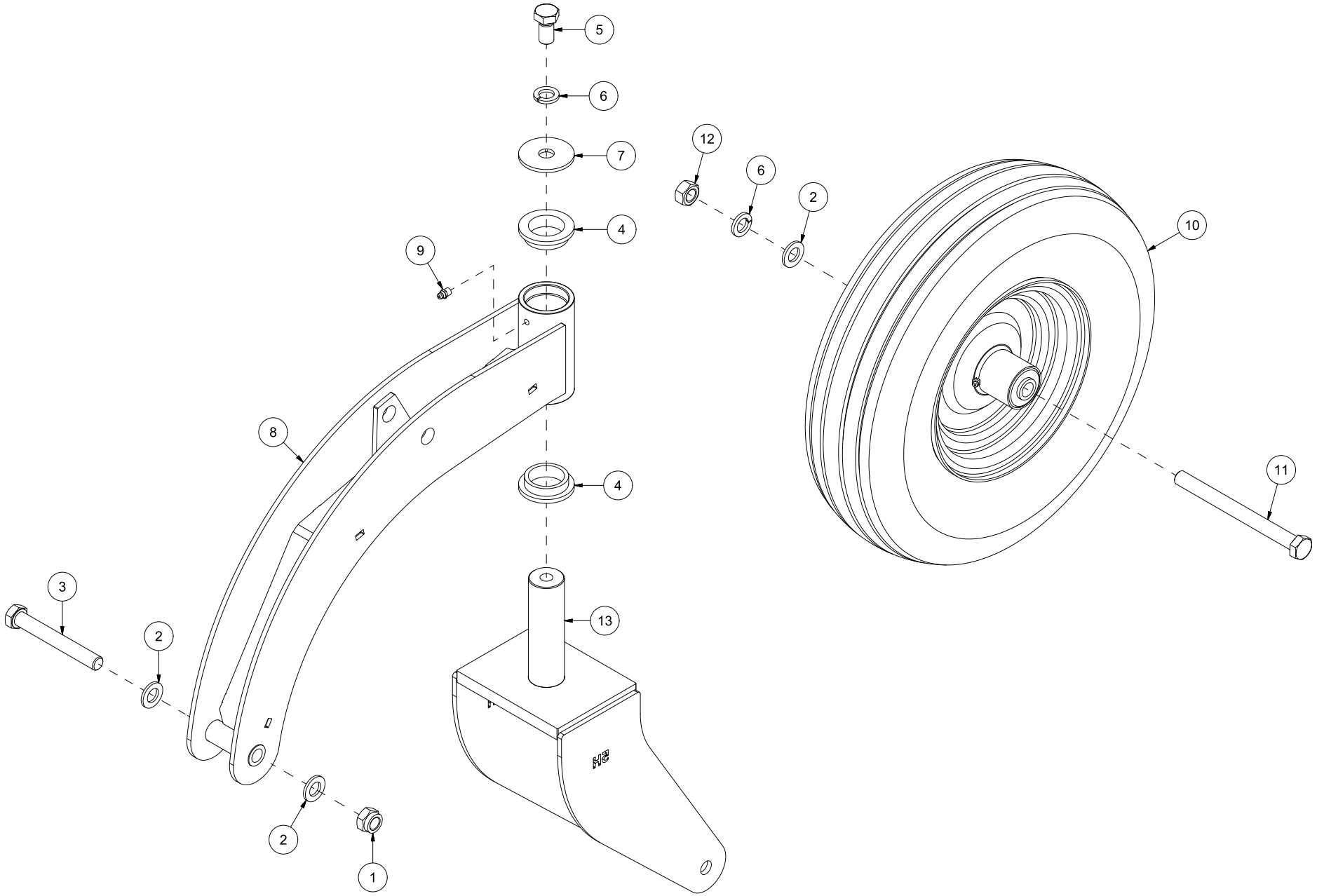
5
6
7
4
9
8
4
3
2
13
2
1
12
6
2
10
11

Pos	Qty	Article no	Designation
1	1	2483613	Locking nut M16 ElZn DIN 985
2	3	2531078	Washer M16 ElZn DIN 125
3	1	2422504	Hexagon screw M16x120 ElZn 8.8 DIN 931
4	2	2245023	Plastic bearing Ø39/48x15
5	1	2422485	Hexagon screw M16x30 ElZn 8.8 DIN 933
6	2	2534078	Spring washer M16 ElZn DIN 127
7	1	12352053	Washer Ø17/60x4
8	1	12352054	Wheel arm HTS
9	1	2478407	Grease nipple Straight M8
10	1	2941500	Wheel 5.00x8 6L Complete with hub
11	1	2422510	Hexagon screw M16x180 ElZn 8.8 DIN 931
12	1	2481613	Hexagon nut M16 ElZn DIN 934
13	1	12352046	Wheel fork 5" HTS

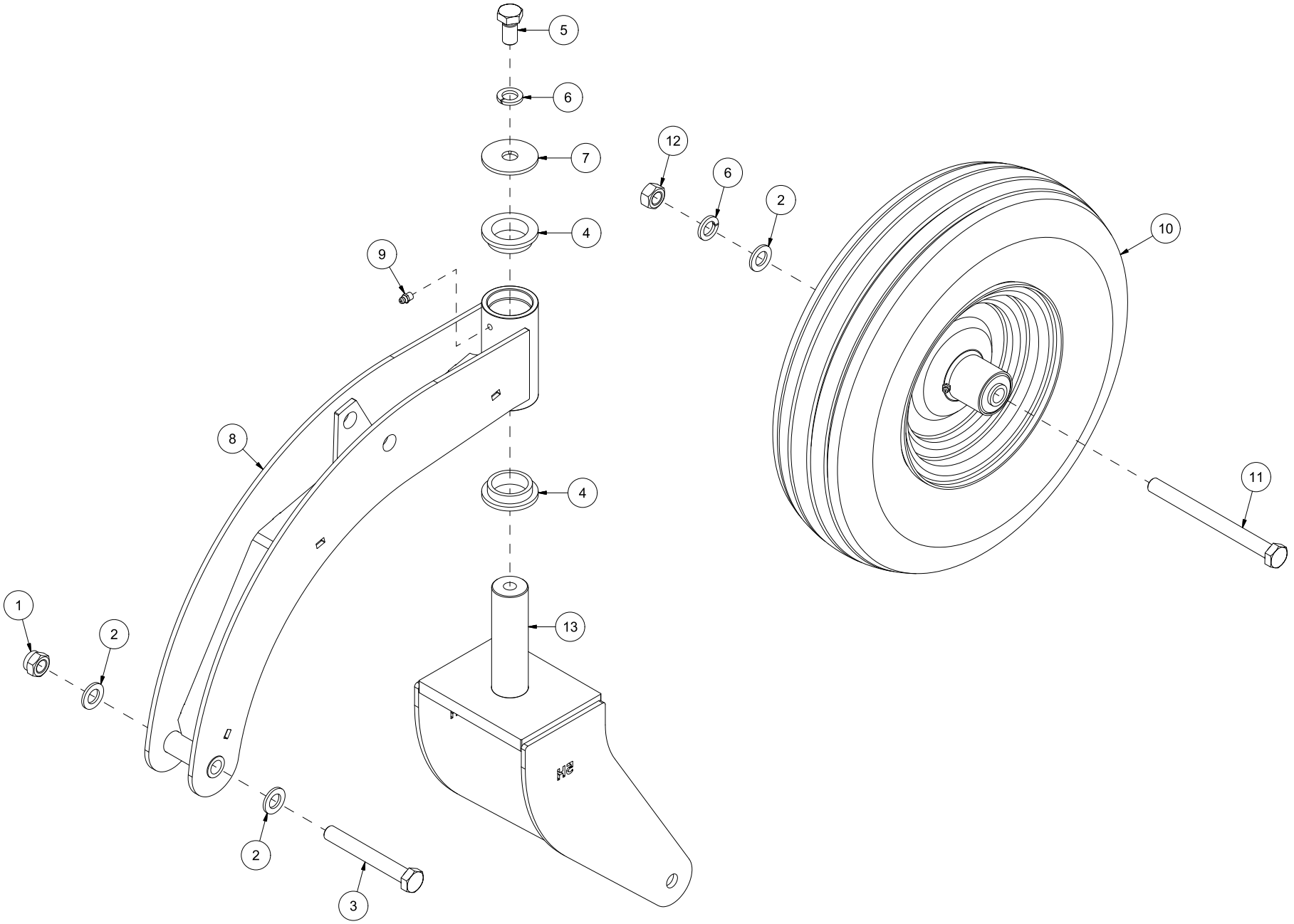
5
6
7
4
9
8
4
1
2
13
2
3
12
6
2
10
11

Pos	Qty	Article no	Designation
1	1	2483613	Locking nut M16 ElZn DIN 985
2	3	2531078	Washer M16 ElZn DIN 125
3	1	2422504	Hexagon screw M16x120 ElZn 8.8 DIN 931
4	2	2245023	Plastic bearing Ø39/48x15
5	1	2422485	Hexagon screw M16x30 ElZn 8.8 DIN 933
6	2	2534078	Spring washer M16 ElZn DIN 127
7	1	12352053	Washer Ø17/60x4
8	1	12352054	Wheel arm HTS
9	1	2478407	Grease nipple Straight M8
10	1	2941500	Wheel 5.00x8 6L Complete with hub
11	1	2422510	Hexagon screw M16x180 ElZn 8.8 DIN 931
12	1	2481613	Hexagon nut M16 ElZn DIN 934
13	1	12352046	Wheel fork 5" HTS

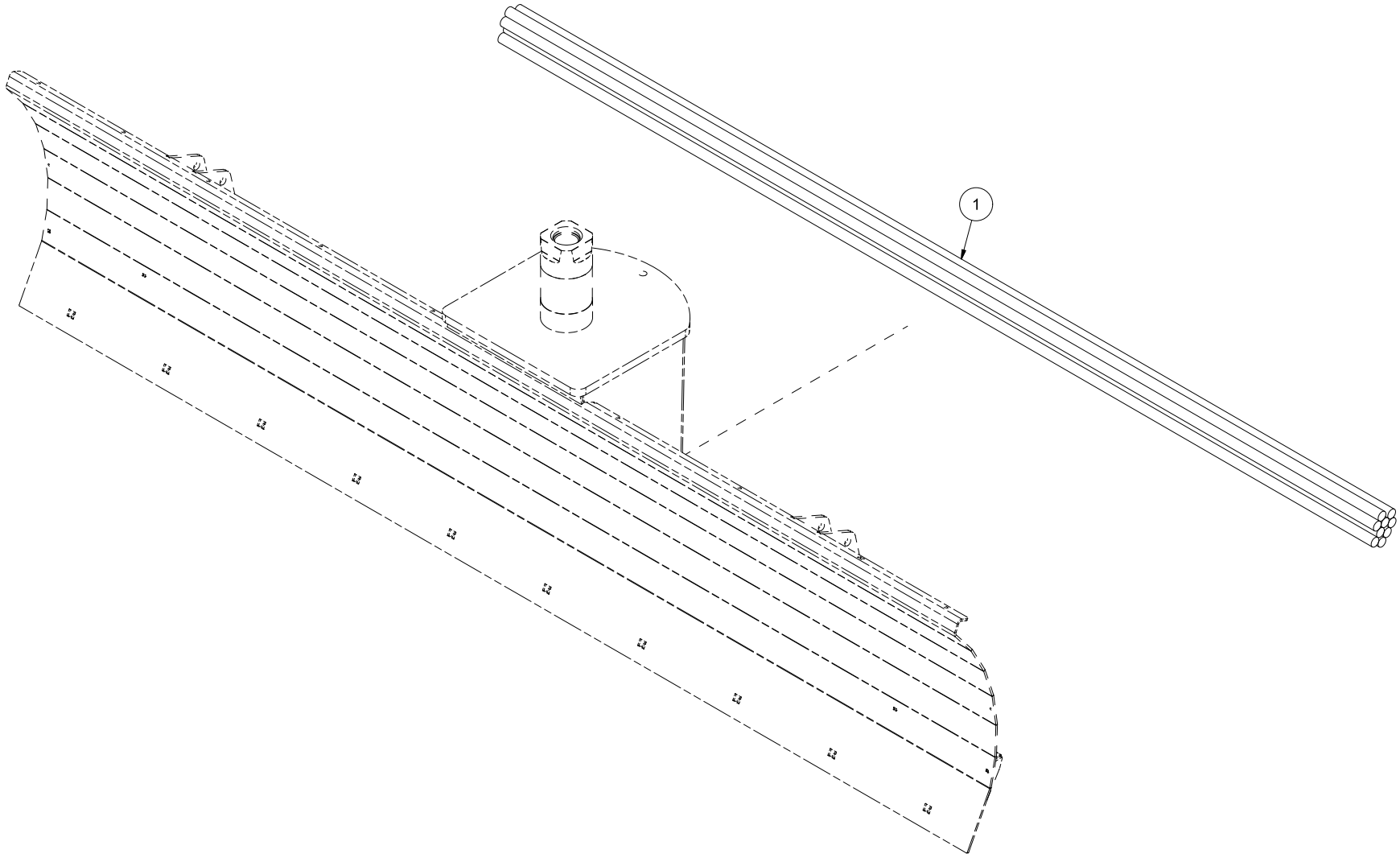
1

Pos	Qty	Article no	Designation
1	9	12383012	Bolt Ø25 L2800